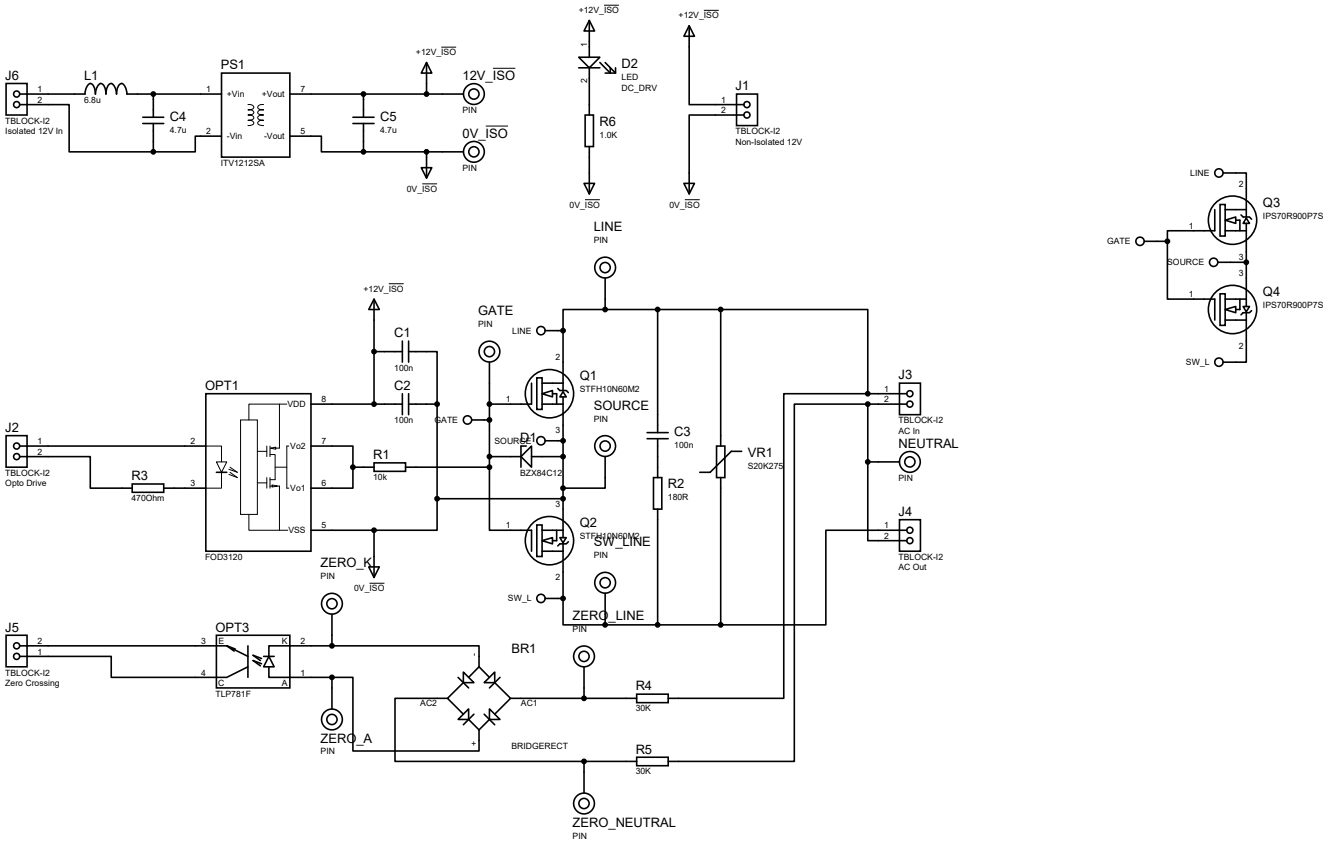

SHEET NAME:		DATE:	
DESIGN TITLE:		10/02/2019	
FILE NAME:	dimmerdemoMULTIFET.DSN	SDG Electronics	
PATH: C:\dev\Dimmers\PCB\DemoPCB\dimmerdemoMULTIFET.DSN		PAGE:	
BY: Steven Gardner	REV: 1	1 of 1	