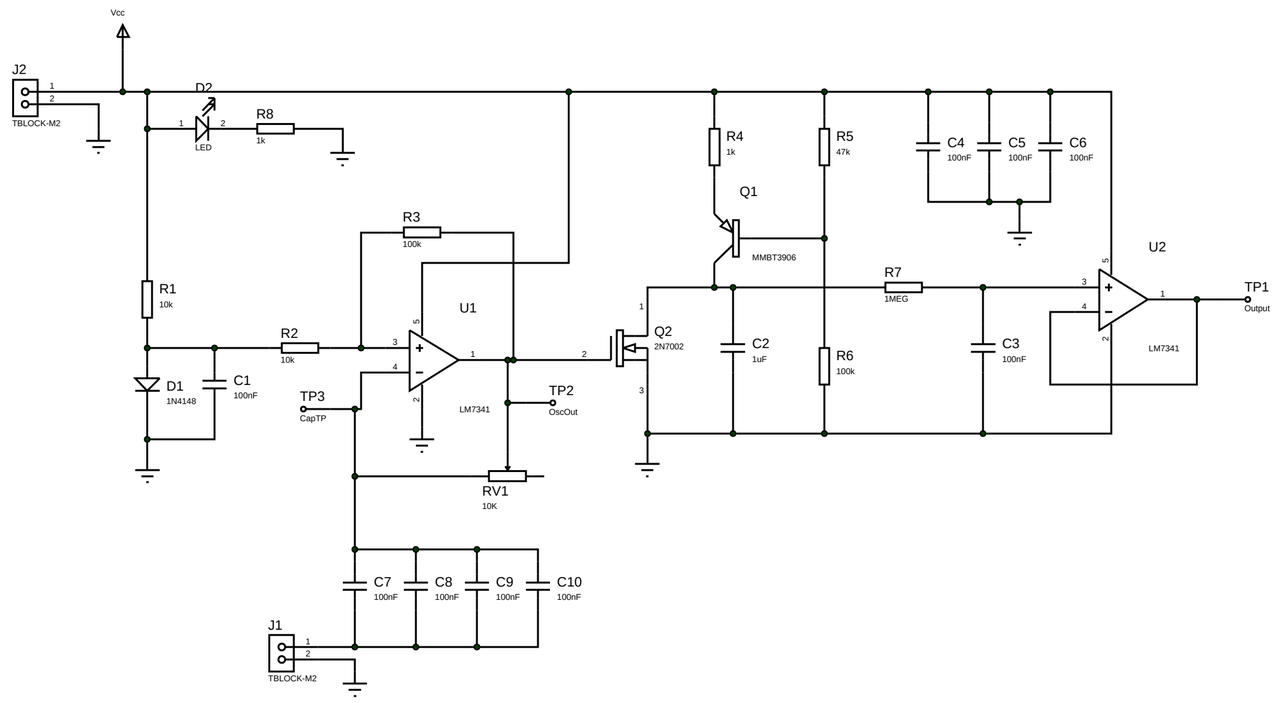

SHEET NAME:	LED Controller	DATE:
DESIGN TITLE:	MLCC Capacitor Tester	16/07/2019
FILE NAME:	mlcc.DSN	SDG Electronics
PATH: C:\dev\MLCC Capacitor Tester\PCB\mlcc.DSN		PAGE:
BY: Steven Gardner	REV: 1	1 of 1